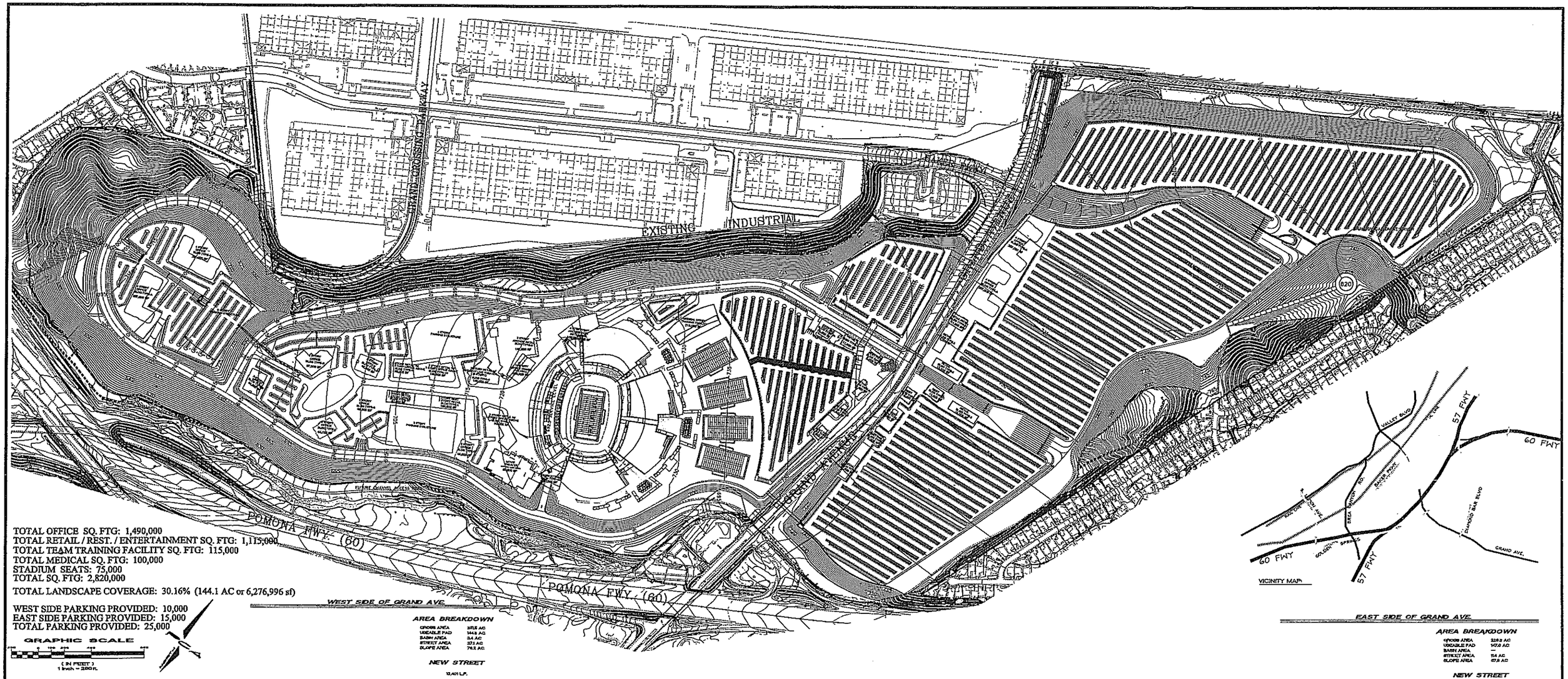

TOTAL OFFICE SQ. FTG: 1,490,000
TOTAL RETAIL / REST. / ENTERTAINMENT SQ. FTG: 1,115,000
TOTAL TEAM TRAINING FACILITY SQ. FTG: 115,000
TOTAL MEDICAL SQ. FTG: 100,000
STADIUM SEATS: 75,000
TOTAL SQ. FTG: 2,820,000

TOTAL LANDSCAPE COVERAGE: 30.16% (144.1 AC or 6,276,996 sf)

WEST SIDE PARKING PROVIDED: 10,000
EAST SIDE PARKING PROVIDED: 15,000
TOTAL PARKING PROVIDED: 25,000

SCALE: 1" = 200'-0"

PROJECT NO. 6186 - EX-1N

INDUSTRY BUSINESS CENTER AND STADIUM DEVELOPMENT

MAJESTIC REALTY CO.

13191 CROSSROADS PARKWAY NORTH, SIXTH FLOOR, CITY OF INDUSTRY, CALIFORNIA 91746

04/14/08

MASTER SITE PLAN

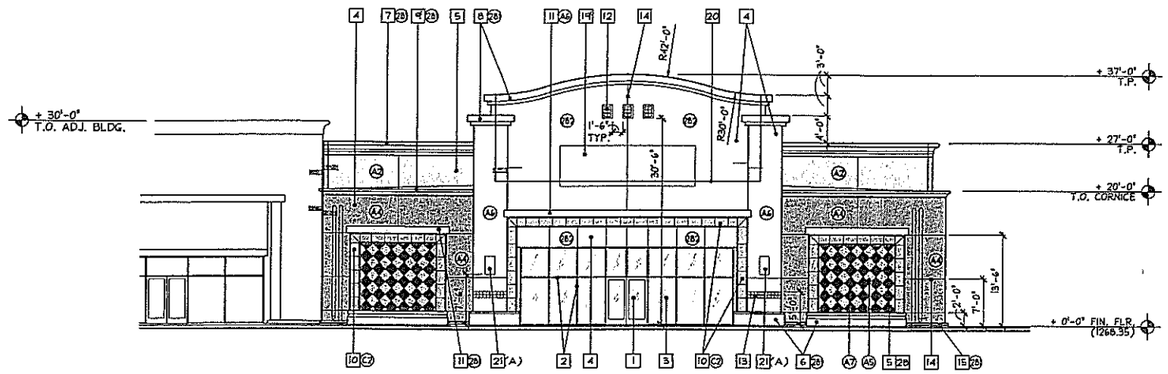

WEST ELEVATION
SCALE: 1/8"=1'-0"

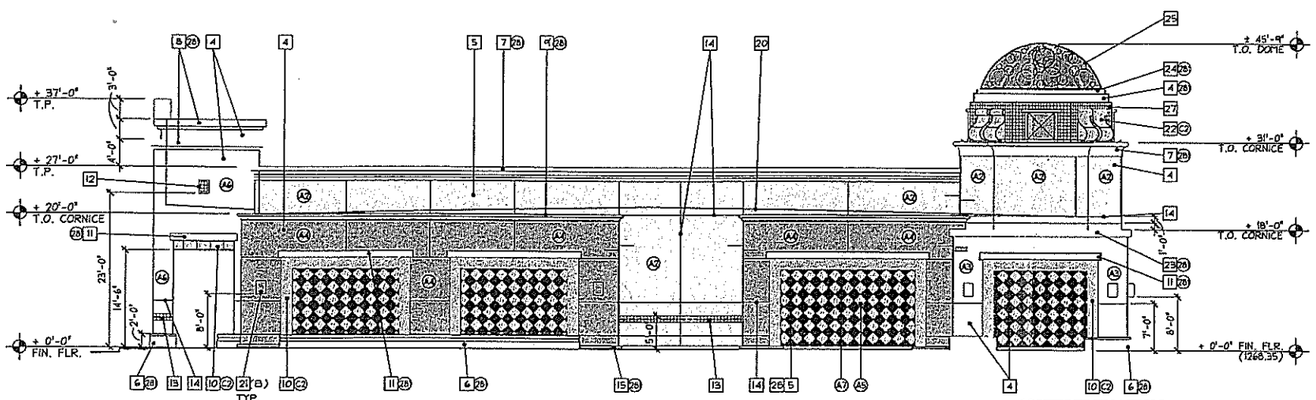

SOUTH ELEVATION
SCALE: 1/8"=1'-0"

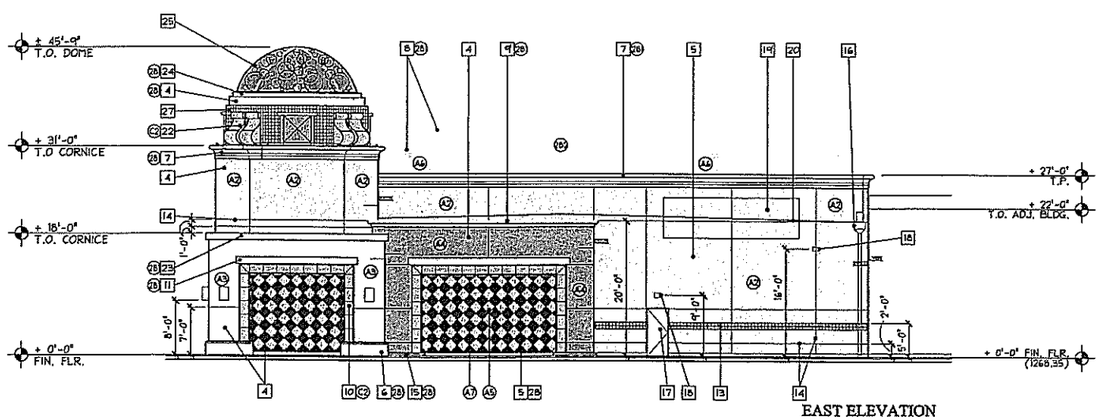

EAST ELEVATION
SCALE: 1/8"=1'-0"

EXTERIOR FINISH KEYNOTES

1. ALUMINUM STOREFRONT ENTRANCE DOOR
2. ALUMINUM STOREFRONT FRAMING SYSTEM BRONZE FINISH
3. 1/4" CLEAR GLASS - TEMPERED WHERE REQUIRED
4. LIGHT SAND PLASTER O/ WOOD FRAMING
5. LIGHT SAND PLASTER O/ 8" CMU
6. MEDIUM SAND PLASTER O/ 8" CMU
7. FOAM CORNICE, SMOOTH PLASTER FINISH (4B/AD7)
8. FOAM CORNICE, SMOOTH PLASTER FINISH (4D/AD7)
9. FOAM CORNICE, SMOOTH PLASTER FINISH (4C/AD7)
10. FOAM ACCENT TRIM, SMOOTH PLASTER FINISH (4A/AD7)
11. 6" RADIUS HALF ROUND FOAM TRIM SMOOTH PLASTER FINISH. (4E/AD7)
12. CERAMIC TILE MEDALLION (14/AD7)
13. CERAMIC ACCENT TILE (19/AD7)
14. 1/4" METAL REVEALS - PAINTED TO MATCH ADJACENT SURFACE (20/AD7)
15. CONCRETE BASE
16. DOWNSPOUT - PAINTED TO MATCH ADJACENT SURFACE
17. HOLLOW METAL DOORS - PAINTED TO MATCH ADJACENT SURFACE
18. WALL MOUNTED LIGHT FIXTURE
19. TENANT SIGN PLACEMENT AREA
20. ROOF LINE (BEYOND)
21. WALL MOUNTED LIGHT FIXTURE
    A: ART MFG. INC. #R.L3009
    B: ART MFG. INC. #R.L3008
22. FOAM ACCENT TRIM, SMOOTH PLASTER FINISH (7/A10)
23. FOAM ACCENT TRIM, SMOOTH PLASTER FINISH
24. 24 GA FLASHING
25. METAL DOME, PAINTED: COLOR TO MATCH 'SHERMAN WILLIAMS' #SW2837 - AURORA BROWN
26. NOT USED
27. CERAMIC TILE (16/AD3)
28. 16" DIAG. SQUARES, (CHECKERBOARD PATTERN), W/ 1/4" METAL REVEALS

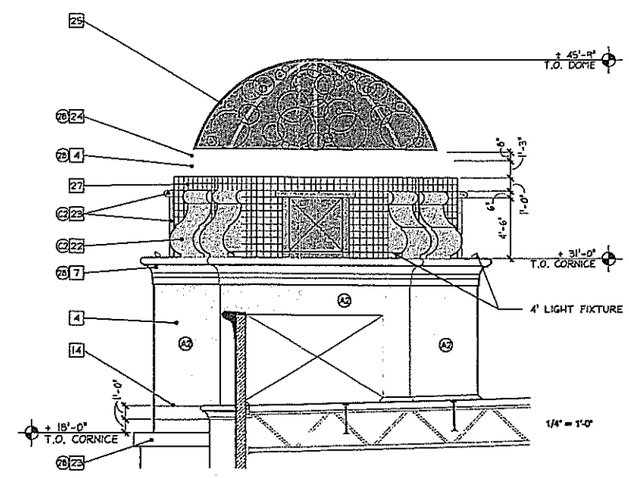

TOWER ELEVATION
SCALE: 1/4"=1'-0"

RETAIL BUILDING ELEVATIONS

SCALE: VARIES

PROJECT NO. 6186 - EX-10-ELEVATIONS

INDUSTRY BUSINESS CENTER AND STADIUM DEVELOPMENT

MAJESTIC REALTY CO.

13191 CROSSROADS PARKWAY NORTH, SIXTH FLOOR, CITY OF INDUSTRY, CALIFORNIA 91746

02/04/ 08

BLDG. TYPE 1 ELEVATIONS

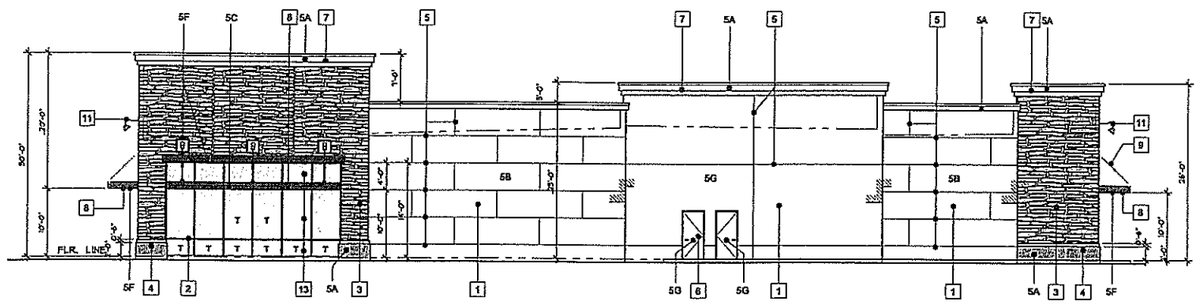

SOUTH ELEVATION

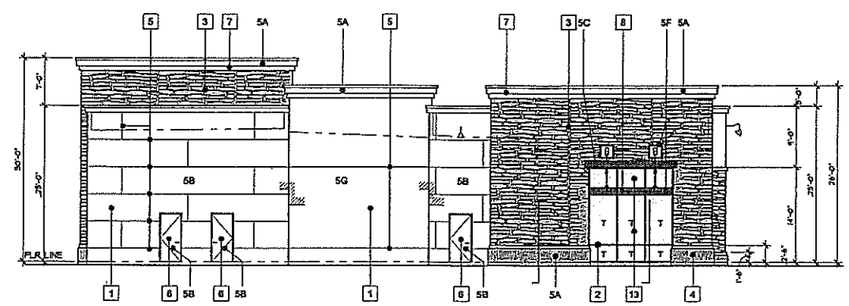

EAST ELEVATION

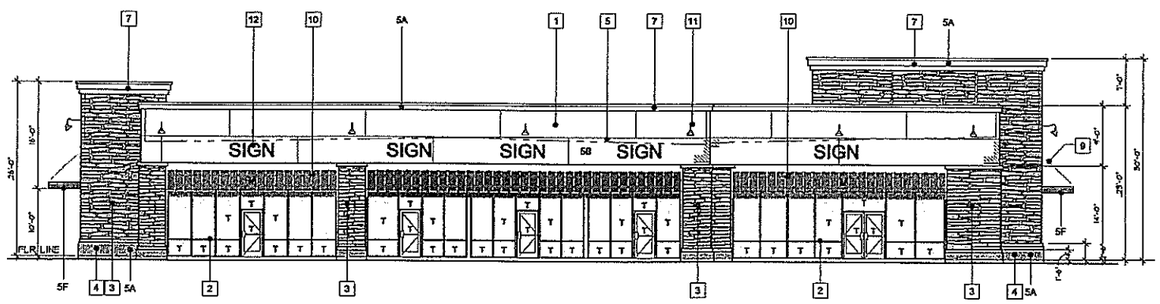

NORTH ELEVATION

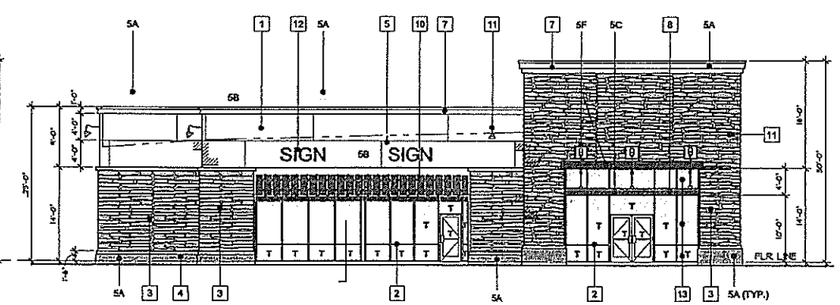

WEST ELEVATION

NOTE:
ALL FINAL PAINT COLORS SA TO SH SHALL BE APPROVED IN FIELD BY THE PLANNING DEPT. PRIOR TO PAINTING OF THE BUILDING.

MATERIAL LEGEND

1. WOOD FRAME STRUCTURE w/ EXTERIOR STUCCO w/ LIGHT SAND FIN. OVER MTL. LATCH & BLDG. PAPER
2. "KAWNEER" BAKED ENAMEL ALUMINUM STOREFRONT OR APPD. EQ. - LEAF GREEN
3. WOOD FRAME STRUCTURE w/ SIMULATED STONE VENEER FIN. (VIRGINIA LEDGE "ASPEN")
4. CONCRETE BASE w/ PLASTER FIN.
5. PLASTER EXPANSION/ CONTROL JOINT (1B ADD2)
6. HOLLOW METAL DOOR - PAINTED
7. PLASTER FOAM CORNICE & TRIM ELEMENTS
8. SUSPENDED METAL CANOPY
9. METAL BRACKET ARM TO SUPPORT CANOPY (PAINTED)
10. DECORATIVE FABRIC AWNING
11. WALL MOUNTED LIGHT FIXTURE
12. ILLUMINATED STORE SIGNAGE (BY OTHERS)
13. 1/4" THICK CLEAR GLASS
    T= DENOTES TEMPERED GLASS

RETAIL BUILDING ELEVATIONS

SCALE: 1/8" = 1'-0"

INDUSTRY BUSINESS CENTER AND STADIUM DEVELOPMENT

02/04/ 08

PROJECT NO. 6186 - EX-6-ELEVATIONS

MAJESTIC REALTY CO.

BLDG. TYPE 2 ELEVATIONS

13191 CROSSROADS PARKWAY NORTH, SIXTH FLOOR, CITY OF INDUSTRY, CALIFORNIA 91746

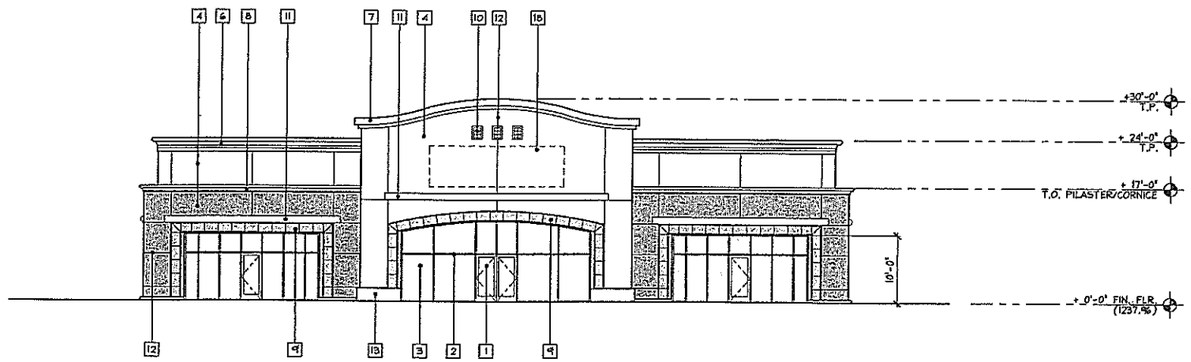

EAST ELEVATION

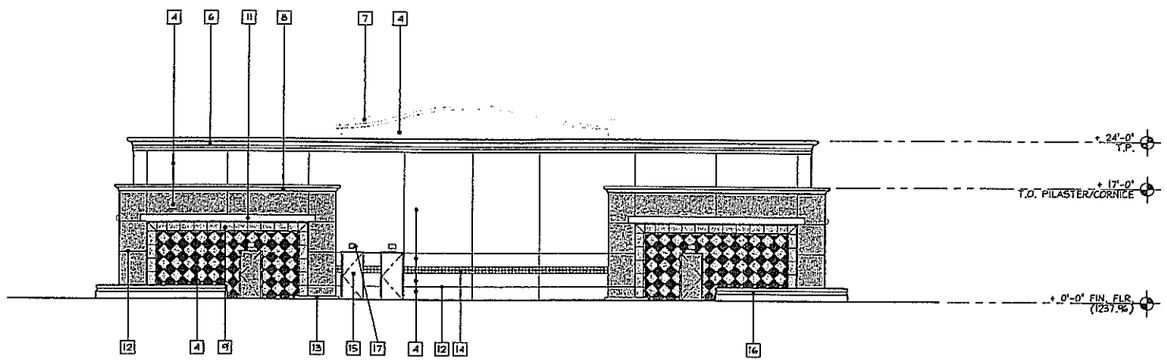

WEST ELEVATION

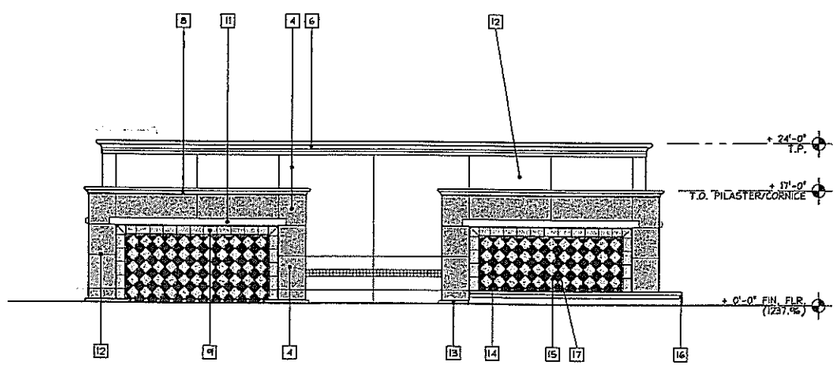

NORTH ELEVATION

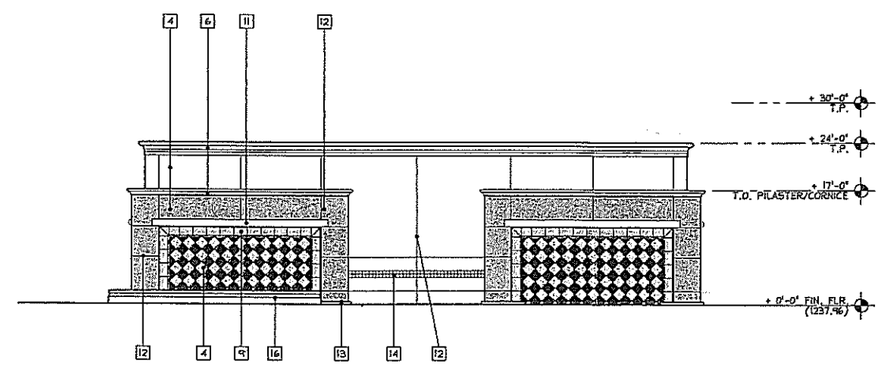

SOUTH ELEVATION

EXTERIOR FINISH KEYNOTES

1. ALUMINUM STOREFRONT ENTRANCE DOOR
2. ALUMINUM STOREFRONT FRAMING SYSTEM
3. CLEAR GLASS - TEMPERED WHERE REQUIRED
4. LIGHT SAND PLASTER O/ WOOD FRAMING
5. MEDIUM SAND PLASTER O/ WOOD FRAMING
6. FOAM CORNICE, SMOOTH PLASTER FINISH
7. FOAM CORNICE, SMOOTH PLASTER FINISH
8. FOAM CORNICE, SMOOTH PLASTER FINISH
9. FOAM ACCENT TRIM, SMOOTH PLASTER FINISH
10. CERAMIC TILE MEDALLION
11. 6" RADIUS HALF ROUND FOAM TRIM SMOOTH PLASTER FINISH.
12. 1/4" METAL REVEALS - PAINTED TO MATCH ADJACENT SURFACE
13. CONCRETE BASE
14. CERAMIC ACCENT TILE
15. HOLLOW METAL DOORS - PAINTED TO MATCH ADJACENT SURFACE
16. CONCRETE PLANTER
17. WALL MOUNTED LIGHT FIXTURE
18. TENANT SIGN PLACEMENT AREA

RETAIL BUILDING ELEVATIONS

SCALE: 1/8" = 1'-0"

PROJECT NO. 6186 - EX-8-ELEVATIONS

INDUSTRY BUSINESS CENTER AND STADIUM DEVELOPMENT

MAJESTIC REALTY CO.

02 /04/ 08

BLDG. TYPE 3 ELEVATIONS

13191 CROSSROADS PARKWAY NORTH, SIXTH FLOOR, CITY OF INDUSTRY, CALIFORNIA 91746

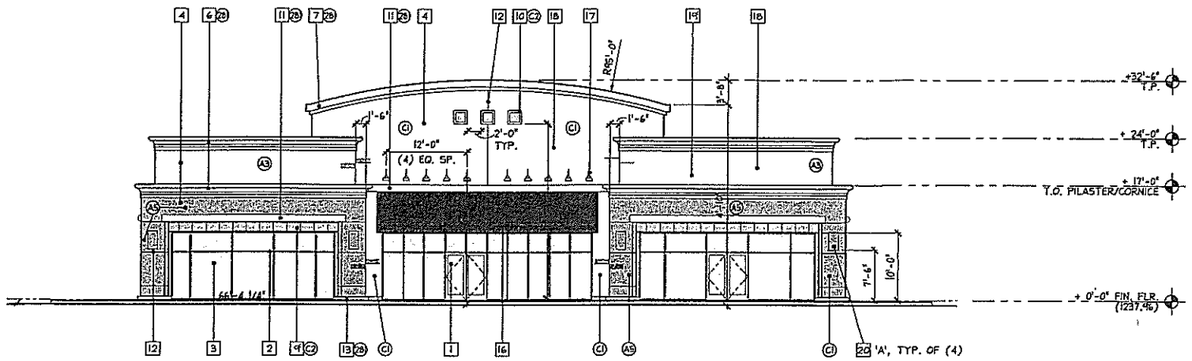

EAST ELEVATION

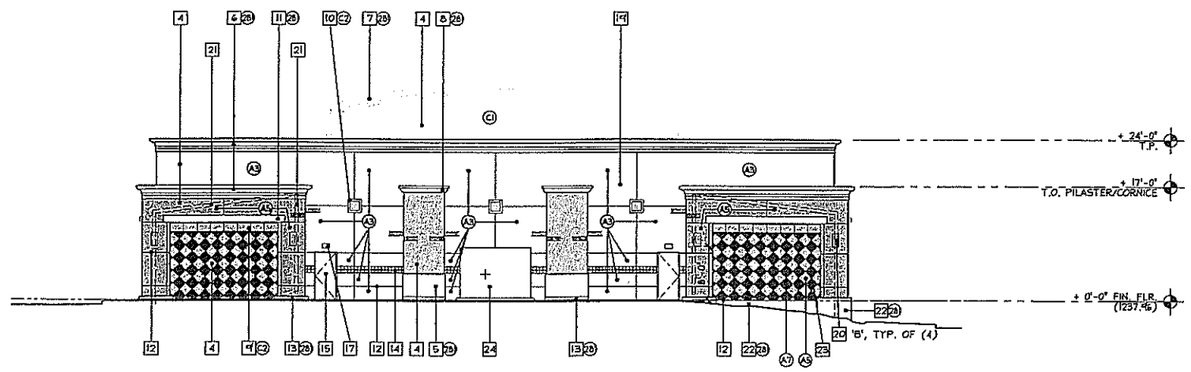

WEST ELEVATION

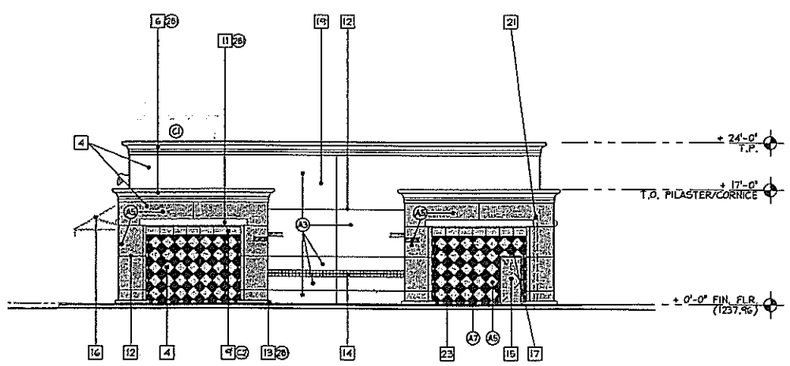

NORTH ELEVATION

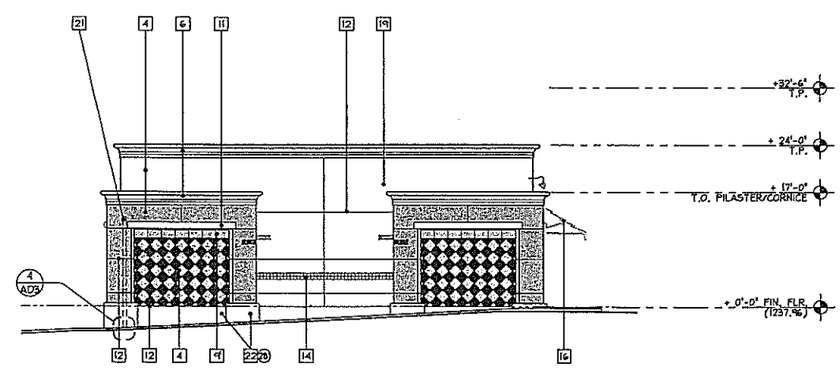

SOUTH ELEVATION

EXTERIOR FINISH KEYNOTES

1. ALUMINUM STOREFRONT ENTRANCE DOOR
2. ALUMINUM STOREFRONT FRAMING SYSTEM BRONZE FINISH
3. CLEAR GLASS - TEMPERED WHERE REQUIRED
4. LIGHT SAND PLASTER O/ WOOD FRAMING
5. MEDIUM SAND PLASTER O/ WOOD FRAMING
6. FOAM CORNICE, SMOOTH PLASTER FINISH (9B/AD7)
7. FOAM CORNICE, SMOOTH PLASTER FINISH (9D/AD7)
8. FOAM CORNICE, SMOOTH PLASTER FINISH (9G/AD7)
9. FOAM ACCENT TRIM, SMOOTH PLASTER FINISH (9A/AD7)
10. FOAM ACCENT TRIM, SMOOTH PLASTER FINISH (9F/AD7) (16/AD7)
11. 6" RADIUS HALF ROUND FOAM TRIM SMOOTH PLASTER FINISH. (9E/AD7)
12. 1/4" METAL REVEALS - PAINTED TO MATCH ADJACENT SURFACE (20/AD7)
13. CONCRETE BASE
14. CERAMIC ACCENT TILE (19/AD7)
15. HOLLOW METAL DOORS - PAINTED TO MATCH ADJACENT SURFACE
16. FABRIC AWNING W/ METAL SUPPORT STRUCTURE SUNBRELL COLOR: FOREST GREEN, STYLE 4637
17. WALL MOUNTED LIGHT FIXTURE
18. TENANT SIGN PLACEMENT AREA
19. ROOF LINE (BEYOND)
20. WALL MOUNTED LIGHT FIXTURE
    A: ART MFG. INC. #RJL3009
    B: ART MFG. INC. #RJL3008
21. LINE OF ROOF DRAIN (BEYOND)
22. MEDIUM SAND PLASTER O/ CONC. FOUNDATION, (8" CMU ALTERNATE)
23. 16" DIAG. SQUARES, (CHECKERBOARD PATTERN), W/ 1/4" METAL REVEALS
24. ELEC. SWITCH GEAR ON CONC. PAD

RETAIL BUILDING ELEVATIONS

SCALE: 1/8" = 1'-0"

INDUSTRY BUSINESS CENTER AND STADIUM DEVELOPMENT

02 /04/ 08

PROJECT NO. 6186 - EX-7-ELEVATIONS

MAJESTIC REALTY CO.

BLDG. TYPE 4 ELEVATIONS

13191 CROSSROADS PARKWAY NORTH, SIXTH FLOOR, CITY OF INDUSTRY, CALIFORNIA 91746

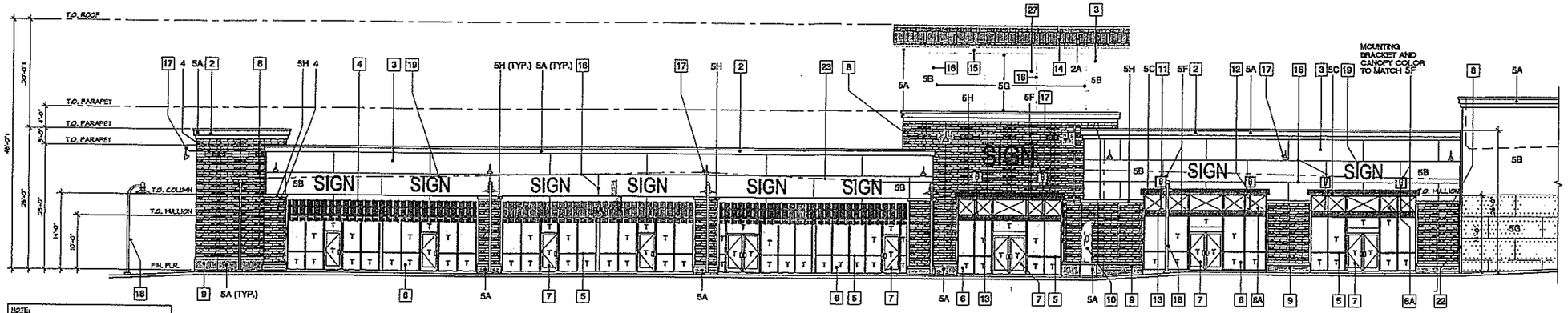

NOTE:
ALL FINAL PAINT COLORS 5A TO 5H SHALL BE APPROVED IN FIELD BY THE PLANNING DEPT. PRIOR TO PAINTING OF THE BUILDING

EAST ELEVATION

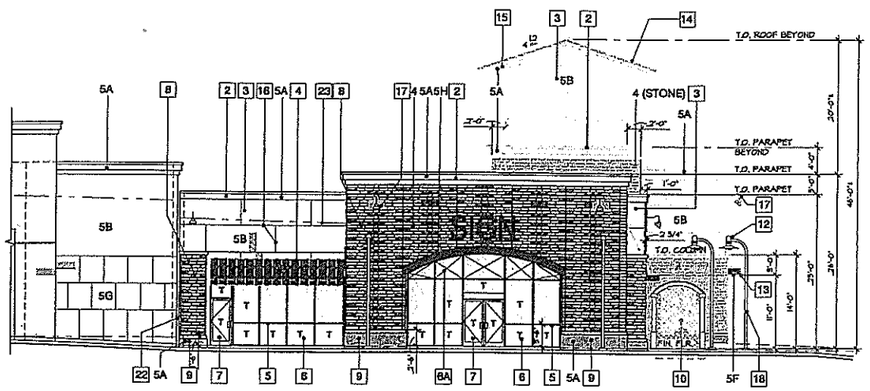

SOUTH ELEVATION

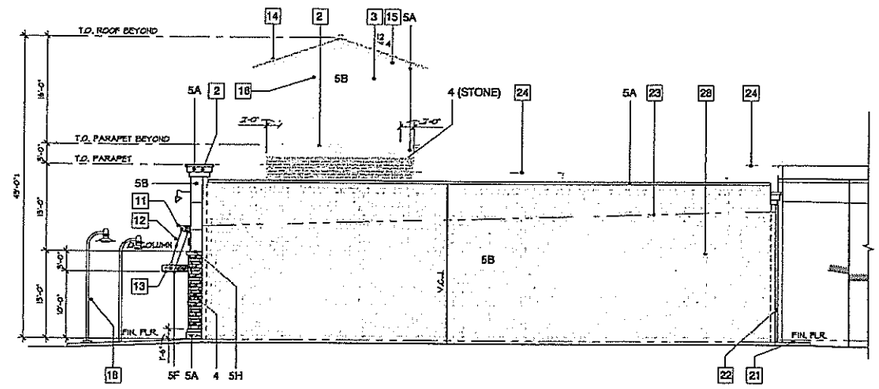

NORTH ELEVATION

MATERIAL LEGEND:

1	8" C.M.U. WALL W/ EXTERIOR PLASTER
2	PLASTER FOAM CORNICE & TRIM ELEMENTS
3	PAINTED PLASTER/ STUCCO & SIGN FASCIAS W/ METAL REVEALS AND LIGHT SAND FIN. OVER MTL. LATH & BLDG. PAPER. SEE DET. 5/A03
4	AWNING BY TENANTS
5	"KAWNEER" BAKED ENAMEL ALUMINUM STOREFRONT OR EQ. - "LEAF" GREEN
6	1/4" THICK CLEAR GLASS T= DENOTES TEMPERED GLASS
6A	☒ DENOTES 1/4" THICK CLEAR GLASS PAINT INSIDE BLACK
7	BAKED ENAMEL ALUMINUM GLASS DOOR TO MATCH STOREFRONT SYSTEM
8	STONE / VENEER FINISH PLASTER W/ CONC. CAP AND BASE (PLASTER FIN. TYP.)
9	CONCRETE BASE W/ PLASTER FINISH.
10	DECORATIVE WATER FOUNTAIN N.I.C.
11	METAL BRACKET ARM TO SUPPORT CANOPY (PAINTED)
12	CABLE STEEL W/ TURN BUCKLE
13	SUSPENDED METAL CANOPY, SEE DET. 6/A03
14	CONCRETE SHAKE ROOF "FLAT"
15	EXPOSED WOOD FASCIA (PAINTED)
16	PLASTER EXPANSION CONTROL JOINT 18/A03
17	WALL MOUNTED EXTERIOR LIGHT
18	DECORATIVE LIGHT STANDARD POST
19	INDIVIDUAL INTERNALLY ILLUMINATED STORE SIGNAGE (BY OTHERS)
20	HOLLOW METAL DOOR (PAINTED)
21	CONCRETE STOOP
22	EXPANSION JOINT
23	ROOF LINE
24	PARAPET LINE BEYOND
25	12" x 18" VENT
26	3'-0" x 3'-0" ACCESS PANEL
27	WOOD FRAME STRUCTURE W/ EXTERIOR STUCCO W/ LIGHT SAND FIN. OVER MTL. LATH & BLDG. PAPER.
28	8" CONCRETE MASONRY UNITS

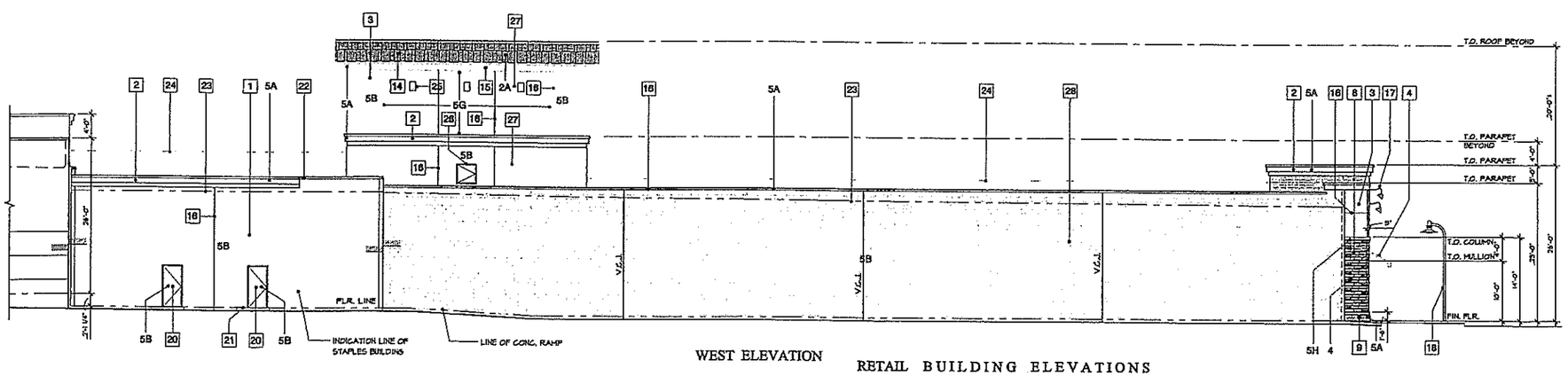

WEST ELEVATION

RETAIL BUILDING ELEVATIONS

SCALE: 1/8" = 1'-0"

PROJECT NO. 6186 - EX-11-ELEVATIONS

INDUSTRY BUSINESS CENTER AND STADIUM DEVELOPMENT

MAJESTIC REALTY CO.

02/04/ 08

BLDG. TYPE 5 ELEVATIONS

13191 CROSSROADS PARKWAY NORTH, SIXTH FLOOR, CITY OF INDUSTRY, CALIFORNIA 91746

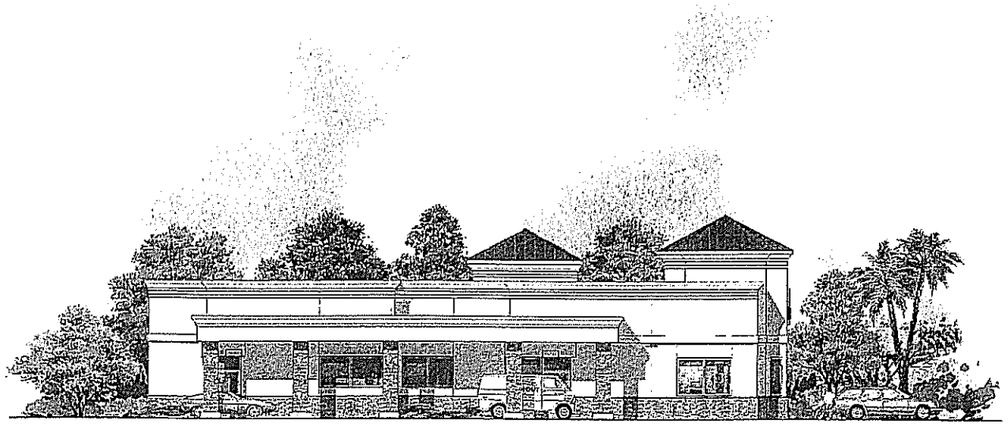

NORTH ELEVATION

MATERIAL LEGEND:

1	8" C.M.U. WALL W/ EXTERIOR PLASTER
2	PLASTER FOAM CORNICE & TRIM ELEMENTS
3	PAINTED PLASTER/ STUCCO & SIGN FASCIAS W/ METAL REVEALS AND LIGHT SAND FIN. OVER MTL. LATH & BLDG. PAPER. SEE DET. 5/A03 AMONG BY TENANTS
4	KAWNEER' BAKED ENAMEL ALUMINUM STOREFRONT OR EQ. - LEAF GREEN
5	1/4" THICK CLEAR GLASS 'T+ DENOTES TEMPERED GLASS
6A	☒ DENOTES 1/4" THICK CLEAR GLASS PAINT INSIDE BLACK
7	BAKED ENAMEL ALUMINUM GLASS DOOR TO MATCH STOREFRONT SYSTEM
8	STONE / VENEER FINISH PLASTER W/ CONC. CAP AND BASE (PLASTER FIN. TYP.)
9	CONCRETE BASE W/ PLASTER FINISH.
10	DECORATIVE WATER FOUNTAIN N.I.C.
11	METAL BRACKET ARM TO SUPPORT CANOPY (PAINTED)
12	CABLE STEEL W/ TURN BUCKLE
13	SUSPENDED METAL CANOPY, SEE DET. 6/A03
14	CONCRETE SHAKE ROOF "FLAT"
15	EXPOSED WOOD FASCIA (PAINTED)
16	PLASTER EXPANSION CONTROL JOINT 16/A03
17	WALL MOUNTED EXTERIOR LIGHT
18	DECORATIVE LIGHT STANDARD POST
19	INDIVIDUAL INTERNALLY ILLUMINATED STORE SIGNAGE (BY OTHERS)
20	HOLLOW METAL DOOR (PAINTED)
21	CONCRETE STOOP
22	EXPANSION JOINT
23	ROOF LINE
24	PARAPET LINE BEYOND
25	12" x 18" VENT
26	3'-0" x 3'-0" ACCESS PANEL
27	WOOD FRAME STRUCTURE W/ EXTERIOR STUCCO W/ LIGHT SAND FIN. OVER MTL. LATH & BLDG. PAPER.
28	8" CONCRETE MASONRY UNITS

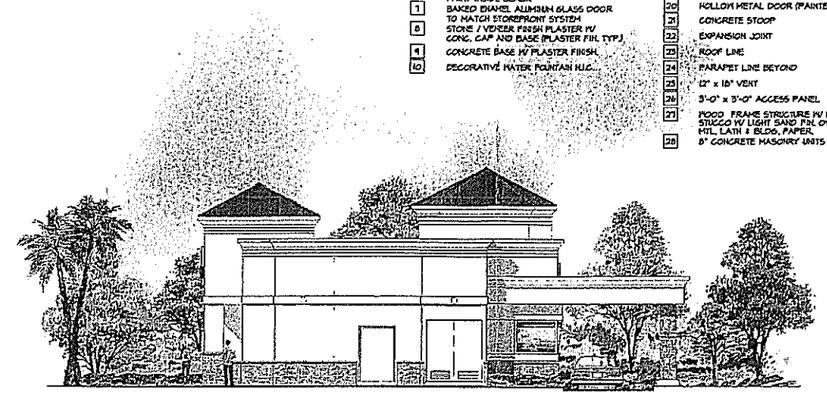

EAST ELEVATION

SOUTH ELEVATION

WEST ELEVATION

RETAIL BUILDING ELEVATIONS

SCALE: N.T.S.

INDUSTRY BUSINESS CENTER AND STADIUM DEVELOPMENT

02 /04/ 08

PROJECT NO. 6186 - EX-12-ELEVATIONS

MAJESTIC REALTY CO.

BLDG. TYPE 6 ELEVATION

13191 CROSSROADS PARKWAY NORTH, SIXTH FLOOR, CITY OF INDUSTRY, CALIFORNIA 91746

SOUTH ELEVATION

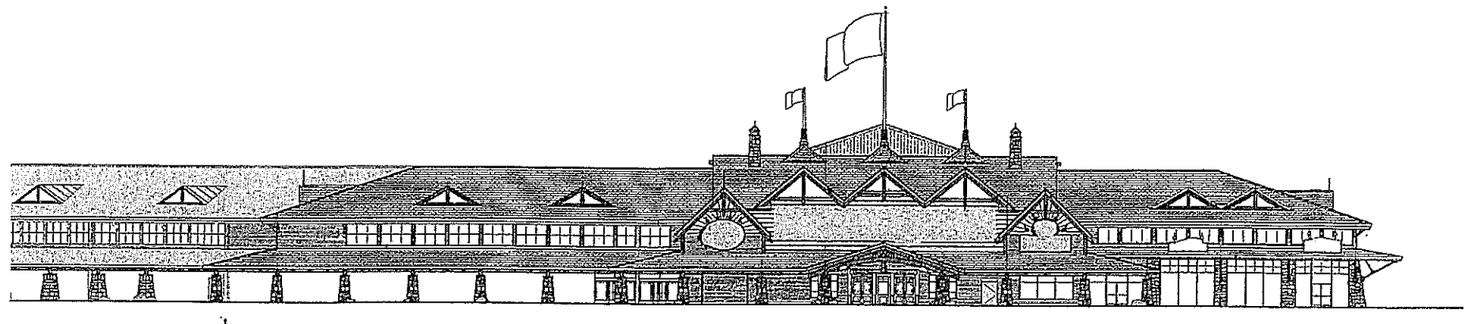

EAST ELEVATION

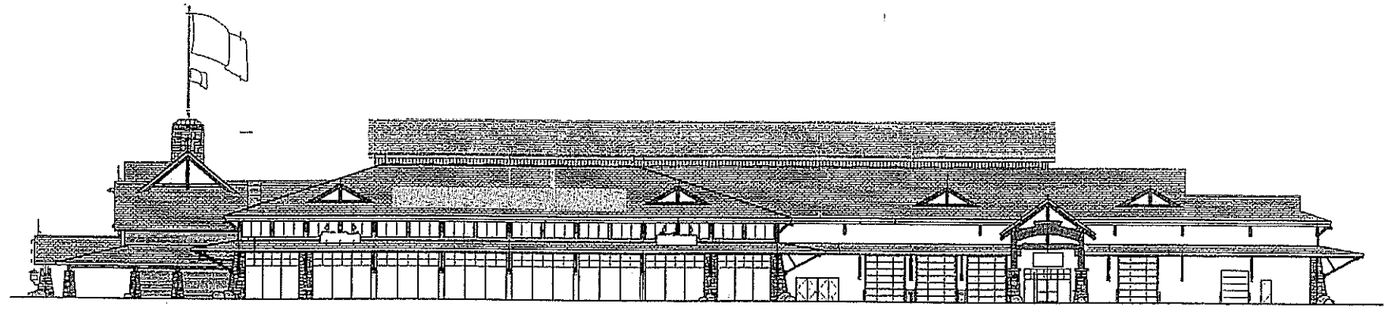

SOUTH WEST ELEVATION

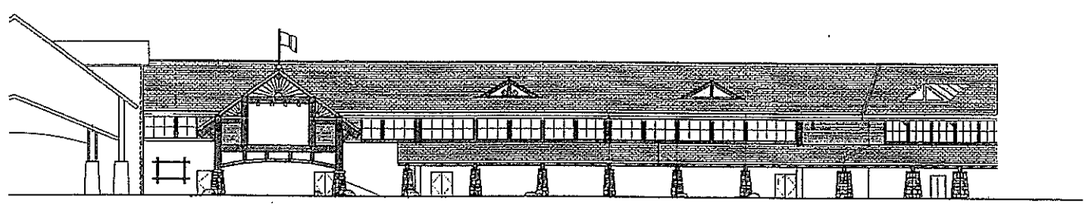

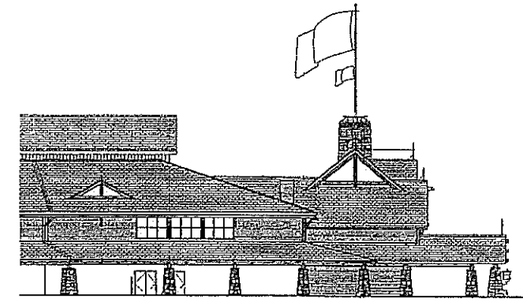

WEST ELEVATION

NORTH ELEVATION

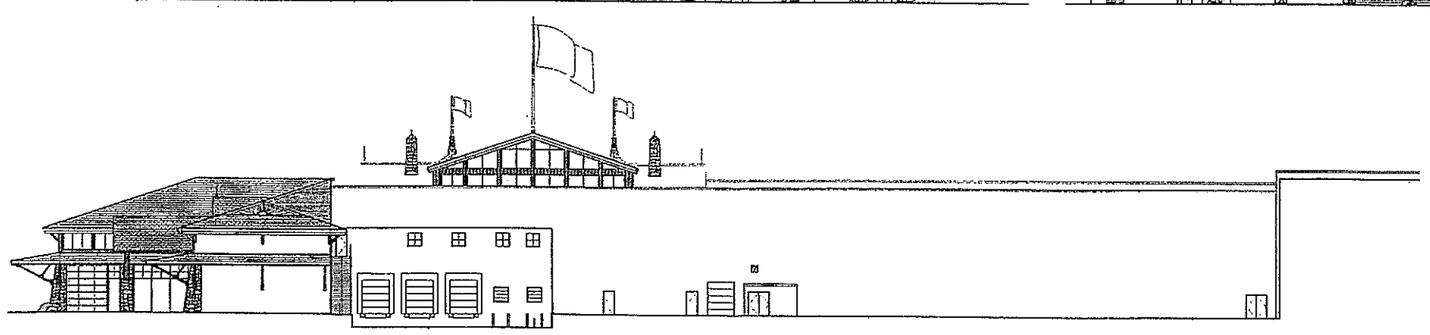

MATERIAL LEGEND:

1. 8" C.M.U. WALL W/ EXTERIOR PLASTER
2. PLASTER FOAM CORNICE & TRIM ELEMENTS
3. PAINTED PLASTER/ STUCCO @ SIGN FASCIAS W/ METAL REVEALS AND LIGHT SAND FIN. OVER MTL. LATH & BLDG. PAPER. SEE DET. (5 / AD2)
4. AWNING BY TENANTS
5. 'KAWNEER' BAKED ENAMEL ALUMINUM STOREFRONT OR EQ. - LEAF GREEN
6. 1/4" THICK CLEAR GLASS T+ DENOTES TEMPERED GLASS
6A. ⊠ DENOTES 1/4" THICK CLEAR GLASS PAINT INSIDE BLACK
7. BAKED ENAMEL ALUMINUM GLASS DOOR TO MATCH STOREFRONT SYSTEM
8. STONE / VENEER FINISH PLASTER W/ CONC. CAP AND BASE (PLASTER FIN. TYP.)
9. CONCRETE BASE W/ PLASTER FINISH.
10. DECORATIVE WATER FOUNTAIN N.I.C.
11. METAL BRACKET ARM TO SUPPORT CANOPY (PAINTED)
12. CABLE STEEL W/ TURN BUCKLE
13. SUSPENDED METAL CANOPY, SEE DET. (6 / AD5)
14. CONCRETE SHAKE ROOF "FLAT"
15. EXPOSED WOOD FASCIA (PAINTED)
16. PLASTER EXPANSION CONTROL JOINT (18 / AD2)
17. WALL MOUNTED EXTERIOR LIGHT
18. DECORATIVE LIGHT STANDARD POST
19. INDIVIDUAL INTERNALLY ILLUMINATED STORE SIGNAGE (BY OTHERS)
20. HOLLOW METAL DOOR (PAINTED)
21. CONCRETE STOOP
22. EXPANSION JOINT
23. ROOF LINE
24. PARAPET LINE BEYOND
25. 12" x 18" VENT
26. 3'-0" x 5'-0" ACCESS PANEL
27. WOOD FRAME STRUCTURE W/ EXTERIOR STUCCO W/ LIGHT SAND FIN. OVER MTL. LATH & BLDG. PAPER.
28. 8" CONCRETE MASONRY UNITS

RETAIL BUILDING ELEVATIONS

INDUSTRY BUSINESS CENTER AND STADIUM DEVELOPMENT

SCALE: 1/16" = 1'-0"

PROJECT NO. 6186 - EX-13-ELEVATIONS

02/04/ 08

BLDG. TYPE 7 ELEVATIONS

MAJESTIC REALTY CO.

13191 CROSSROADS PARKWAY NORTH, SIXTH FLOOR, CITY OF INDUSTRY, CALIFORNIA 91746

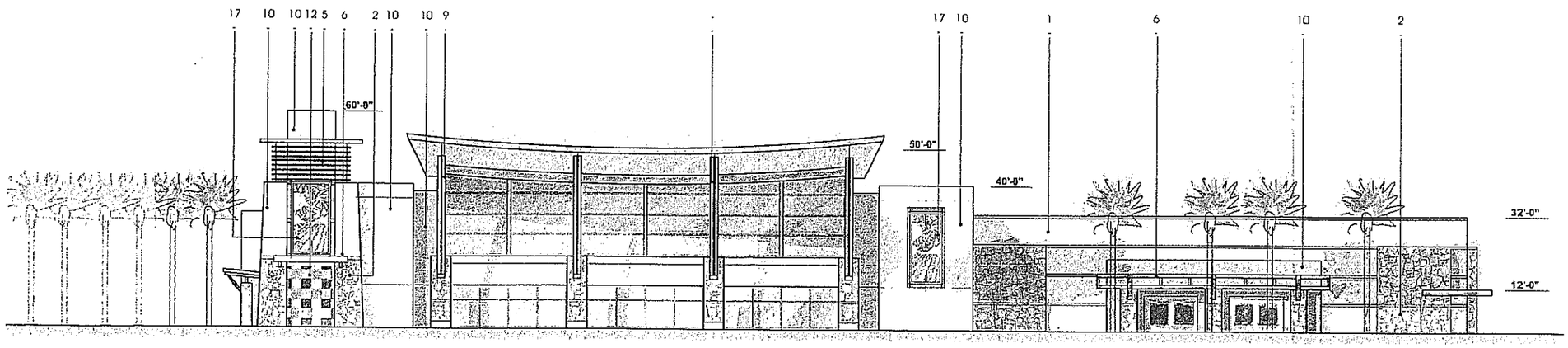

NORTH ELEVATION

RETAIL BUILDING ELEVATIONS

SCALE: N.T.S.

INDUSTRY BUSINESS CENTER AND STADIUM DEVELOPMENT

02 /04/ 08

PROJECT NO. 6186 - EX-9-ELEVATIONS

MAJESTIC REALTY CO.

MOVIE CINEMA ELEVATION

13191 CROSSROADS PARKWAY NORTH, SIXTH FLOOR, CITY OF INDUSTRY, CALIFORNIA 91746

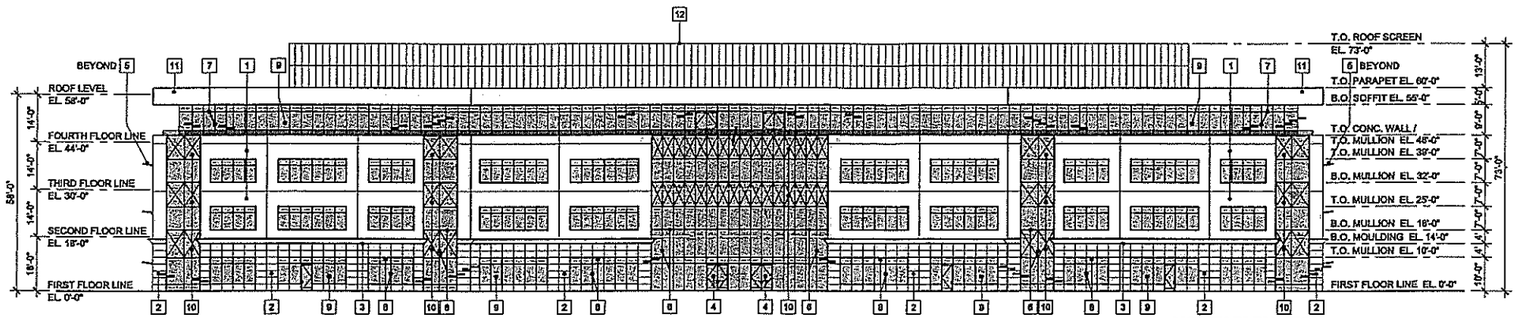

NORTH ELEVATION

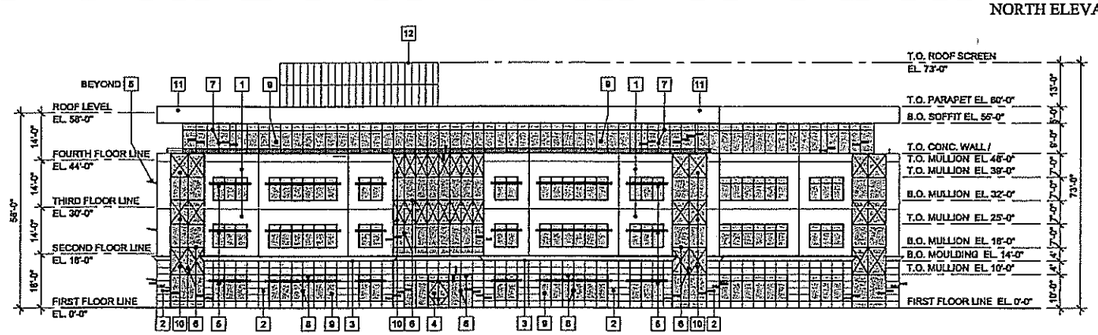

EAST ELEVATION

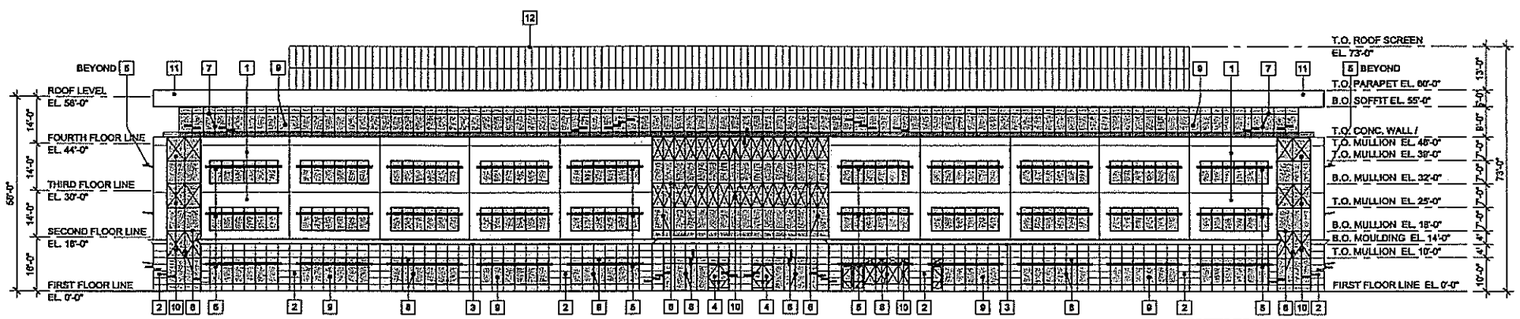

SOUTH ELEVATION

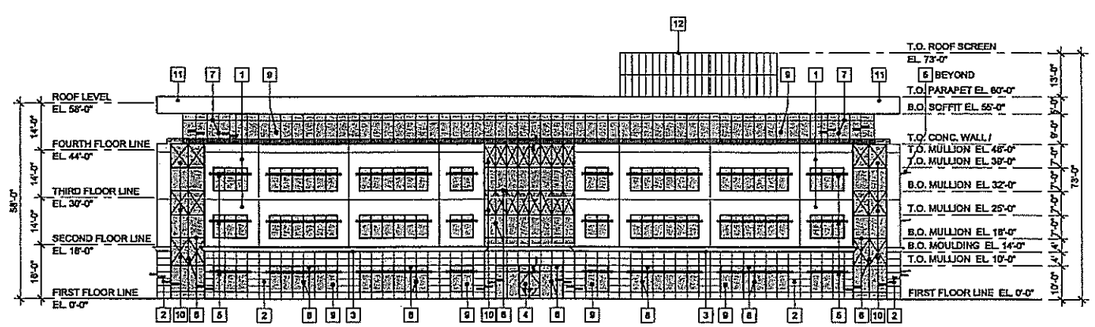

WEST ELEVATION

KEYNOTES

1. TILT-UP CONCRETE PANEL
2. TRAVERTINE OVER TILT-UP CONC. PANEL
3. EIFS MOLDING, SEE DETAIL 7/A22.5
4. HERCULITE DOORS
5. LIGHT SHADE / FIN, SEE DETAIL 8/A24.1
6. 2 1/4" x 10" VERT. MULLION BUTT. GLAZED, BLACK ANODIZED WITH 2 1/4" HORIZONTAL
7. 2 1/4" x 6" VERT. MULLION BUTT. GLAZED, BLACK ANODIZED WITH 2 1/4" HORIZONTAL
8. 2" x 6" CLEAR ANODIZED FRAME
9. 1" INSULATING SOLARCOOL GREYLITE 14 BY P.P.G. (TEMPERED)
10. 1/4" GREYLITE 14 SPANDREL GLASS (TEMPERED)
11. SMOOTH CEMENT PLASTER
12. SMOOTH METAL PANEL EQUIPMENT SCREEN

OFFICE BUILDING ELEVATIONS

SCALE: 1/16" = 1'-0"

INDUSTRY BUSINESS CENTER AND STADIUM DEVELOPMENT

02 /04/ 08

PROJECT NO. 6186 - EX-1-ELEVATIONS

MAJESTIC REALTY CO

BLDG. TYPE A ELEVATIONS

13191 CROSSROADS PARKWAY NORTH, SIXTH FLOOR, CITY OF INDUSTRY, CALIFORNIA 91746

MATERIAL LEGEND:

1. CONCRETE TILT-UP PANEL
2. "SOLAR COOL GREY" SPANDREL GLASS
   - SPANDREL GLASS OVER RECESSED PANEL PROVIDE 2" SLEEVE VENT HOLES W/ BLACK MESH
3. ALUMINUM FRAMING SYSTEM CLEAR ANODIZED ALUM.
4. 1/4" THK "SOLAR COOL GREY" GLAZING T= DENOTES TEMPERED GLASS
5. ALUMINUM STOREFRONT ENTRANCE DOOR
6. HOLLOW METAL DOOR- PAINT PER SCHEDULE
7. ROLL-UP DOOR - PAINTED
8. 2" REVEAL
9. TILT UP CONC. SCREENWALL
10. 1" "V" GROOVE- SEE DETAIL
11. PANEL JOINT SEE DETAIL
13. DOWNSPOUT- PAINT AND MATCH ADJACENT SURFACE
14. 10" X 24" X 4" SOLID RUBBER DOCK BUMPER (TO BE INSTALLED WITH FUTURE T.I. WORK)
15. PRE-CAST CONCRETE TRASH ENCLOSURE WITH METAL GATES SEE DETAIL
16. WALL PACK LIGHT
17. 'CORONADO' LEDGER STONE
18. SAND BLASTED CONCRETE
19. 12' CONCRETE SCREENWALL
20. PAIR OF SLIDING METAL GATE W/ SCREEENED BACKING
21. COMPOSITE METAL CANOPY
22. FOAM 'EYE BROW'
23. FOAM CORNICE

NOTES:

1. ALL PAINTS TO BE ICI

GLAZING AND STOREFRONT NOTES:

1. ALL GLAZING BELOW 36" A.F.F. AND 24" TO SIDES OF DOORS AND ALL SPANDREL SOFFIT PANELS SHALL BE TEMPERED.

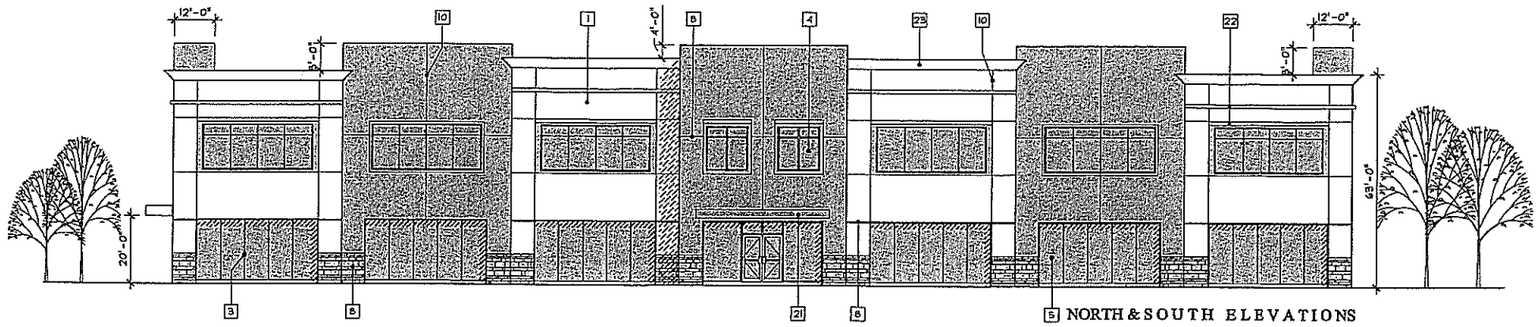

5 NORTH & SOUTH ELEVATIONS

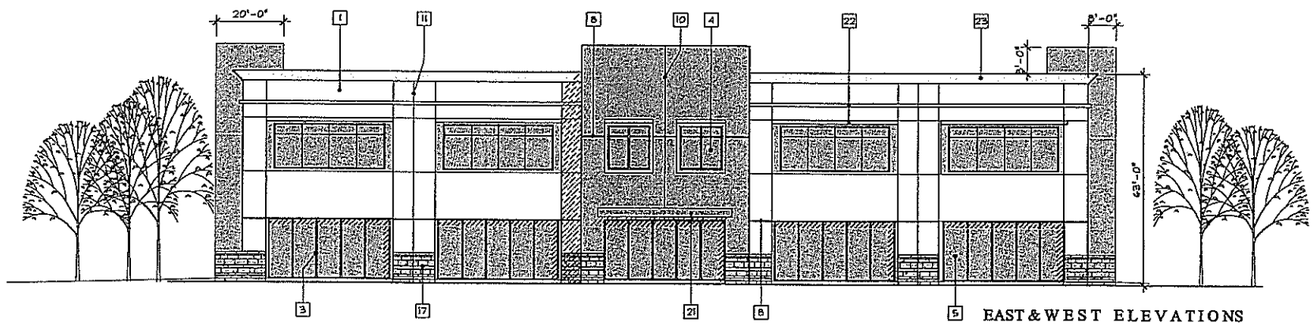

5 EAST & WEST ELEVATIONS

OFFICE BUILDING ELEVATIONS

SCALE: 1/8"=1'-0"

PROJECT NO. 6186 - EX-5

INDUSTRY BUSINESS CENTER AND STADIUM DEVELOPMENT

MAJESTIC REALTY CO.

13191 CROSSROADS PARKWAY NORTH, SIXTH FLOOR, CITY OF INDUSTRY, CALIFORNIA 91746

02 /04/ 08

BLDG. TYPE B ELEVATIONS

MATERIAL LEGEND:

1. CONCRETE TILT-UP PANEL
2. GREEN SPANDREL GLASS
   SPANDREL GLASS
3. ALUMINUM FRAMING SYSTEM- CLEAR ANODIZED
4. 1" TAK INSULATED GREEN GLASS T- DENOTES TEMPERED GLASS
5. ALUMINUM STOREFRONT ENTRANCE DOOR
6. HOLLOW METAL DOOR- PAINT PER SCHEDULE
7. 2" HORIZ. REVEAL - SEE DEATIL (8/AD2)
8. NOT USED
9. PANEL JOINT SEE DETAIL (6/AD3) (7/AD3)
10. OVERFLOW SCUPPER SEE DETAIL (4/AD2) (10/AD2)
11. NOT USED
12. CONCRETE BLOCK TRASH ENCLOSURE WITH METAL GATES SEE DETAIL (14/AD3)
13. WALL MOUNTED LIGHT FIXTURE PER ELECT. DWGS
14. BRASS HERCULITE CLAD DOORS & FRAMES WITH 1/2" CLEAR GLASS - PR. 3'-0" WIDE
15. CONCRETE CURB
16. PAINT STRIPING ON PAVEMENT
17. 90 DEGREE HANDICAPPED STALL PER DET 2/ T3
18. POSTED HANDICAPPED SIGN SEE DETAIL (11/AD3)
19. CONCRETE WHEEL STOP SEE DETAIL (9/AD3)
20. PATH OF HCP ACCESSIBILITY (STRIPE 5" WIDE)
21. CONC. WALK W/ ROTARY FINISH
22. ENTRY WALKS TO BE MEDIUM BROOM FINISHED GRAY CONCRETE
23. TUBE STEEL FRAME SUNSCREEN, TRELLIS
24. CONCRETE STOOP- 5'-0"X5'-6"
25. ALUMINUM FRAMING SYSTEM - BRASS CLAD MULLION WITH 1" INSULATED CLEAR GLASS

NOTES:

1. ALL PAINTS TO BE SINCLAIR.
2. A FINAL COLOR SCHEDULE WITH PAINT SAMPLES SHALL BE SUBMITTED TO PLANNING DEPT. FOR APPROVAL PRIOR TO PAINTING ANY SURFACES.
3. HANDRAILS AT STAIRS AND RAMPS TO RECEIVE ACCENT PAINT (C) PER RESPECTIVE BUILDING.
4. 2" WIDE, 1/2" DEEP REVEAL (SEE ARCH. DETAIL ON SHEET AD2)
5. 1" WIDE, 1/2" DEEP V-GROOVE (SEE ARCH. DETAIL ON SHEET AD2)

GLAZING AND STOREFRONT NOTES:

1. ALL GLAZING BELOW 36" A.F.F. AND 24" TO SIDES OF DOORS AND ALL SPANDREL SOFFIT PANELS SHALL BE TEMPERED.
2. GLAZING AND STOREFRONT SYSTEM SHALL BE DESIGNED TO RESIST A 40 MPH WIND LOAD PER UBC 1620 AND 2403. SUB-CONTRACTOR TO SUBMIT PLANS AND CALCS. TO ARCHITECT AND BUILDING DEPT. FOR APPROVAL PRIOR TO INSTALLATION. DESIGN TO CONFORM AND MEET EXPOSURE C.

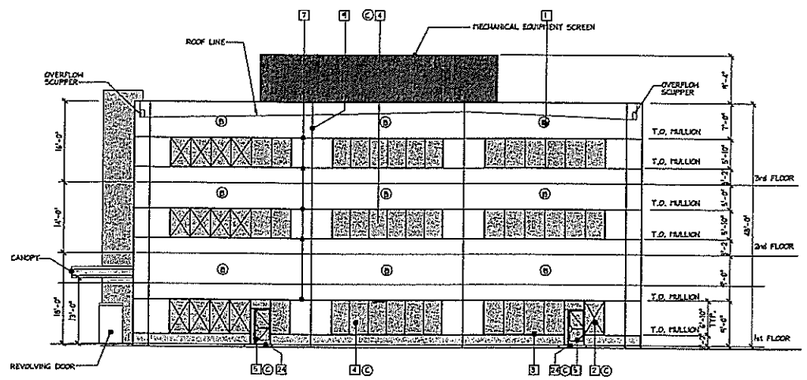

WEST ELEVATION

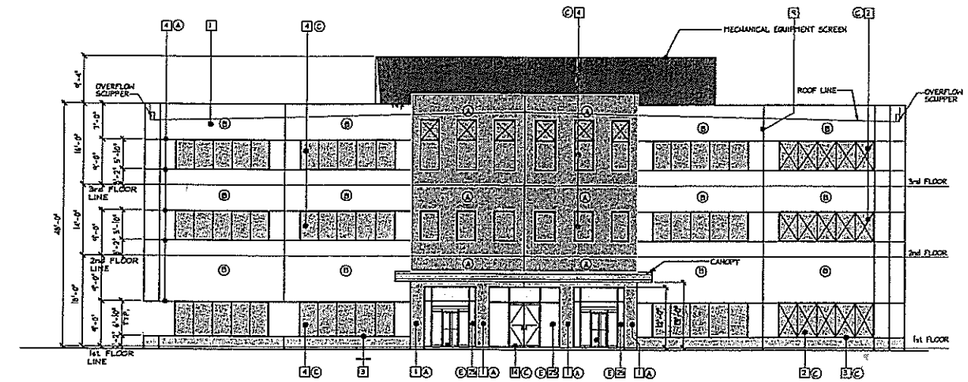

NORTH ELEVATION

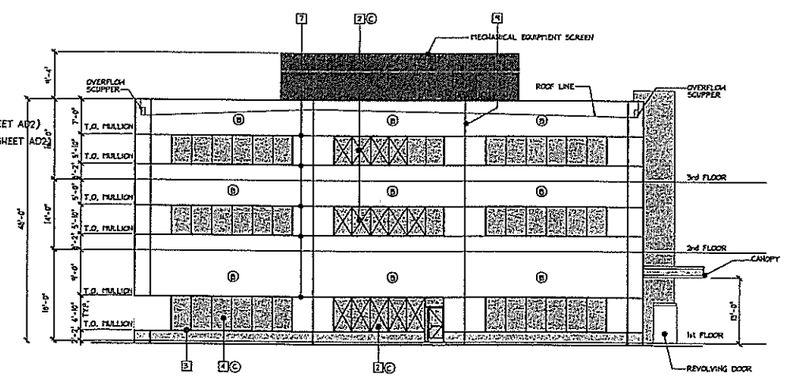

EAST ELEVATION

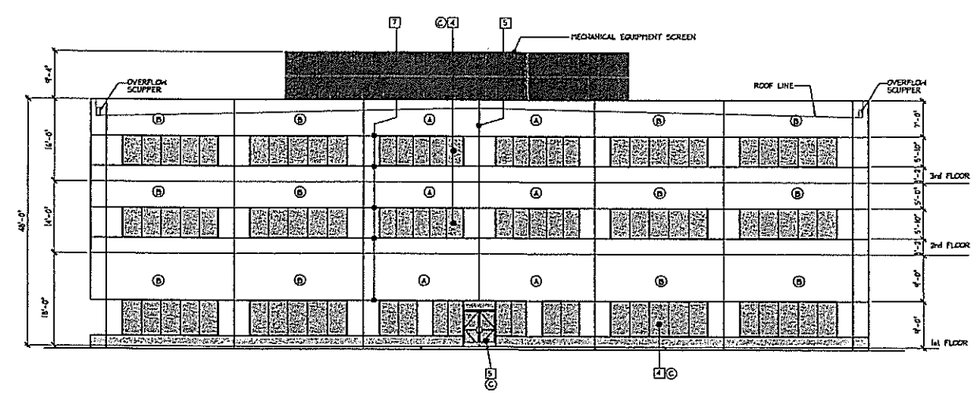

SOUTH ELEVATION

OFFICE BUILDING ELEVATIONS

SCALE: 3/32" = 1'-0"

PROJECT NO. 6186 - EX-4-ELEVATIONS

INSUDTRY BUSINESS CENTER AND STADIUM DEVELOPMENT

MAJESTIC REALTY CO

13191 CROSSROADS PARKWAY NORTH, SIXTH FLOOR, CITY OF INDUSTRY, CALIFORNIA 91746

02 /04/ 08

BLDG. TYPE C ELEVATIONS